"Apollo" Valves | COMMERCIAL PRODUCTS

Strainers

BRONZE WYE STRAINERS

59, 59LF	K-2
59/59LF-PR	K-3
59/59LF-300	K-3

BRONZE MINI-STRAINER

59V	K-4

STAINLESS STEEL WYE STRAINER

YSS/612	K-4

CAST IRON WYE STRAINER

YCT	K-5
YCF	K-6

CARBON STEEL WYE STRAINER

YCS/612	K-5

section K

59 SERIES
BRONZE WYE STRAINER

LEADFREE OPTIONS

59-000 SERIES

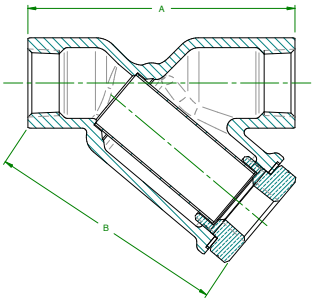

Heavy pattern design with large area screens ensures excellent protection against foreign particles in your fluid system. Corrosion-resistant bronze body and stainless steel screens provide years of service.

FEATURES
- Blow-Off Ball Valve Option (3/4" - 2")
- Replaceable Self-Aligning Screen
- Large Net Flow Area for Longer Maintenance Intervals
- 59LF-400 Series is Female x Male NPT (3/4" & 1" Only)
- Several Screen and Cap Options
- **Proudly Made in USA**

PERFORMANCE RATING
- Working Pressure:
  CWP: 400 psi
  SWP: 125 psi
- Maximum Temperature: 350° F

APPROVALS
- NSF/ANSI 372 - Lead Free (59LF)
- CRN-0E 8959.5

New!

59LF-400 SERIES
FEMALE x MALE NPT

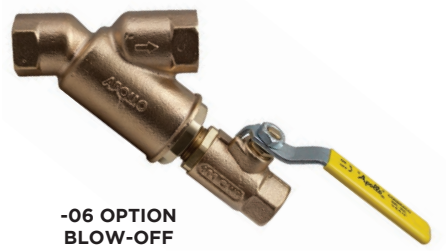

-06 OPTION
BLOW-OFF
BALL VALVE

STANDARD SCREEN

SIZE (IN.)	SCREEN
1/8" - 1/2"	50 Mesh
3/4" - 3"	20 Mesh
4"	.125 Perforation

OPTIONS

SUFFIX	OPTION
-01	Plain Cap
-02	Blow-Off Tap
-P2	Blow-Off with Plug
-06	Ball Valve
-E1	20 Mesh
-B1	60 Mesh
-C1	80 Mesh
-H1	100 Mesh

DIMENSIONS

PART NUMBER	LF PART NUMBER	SIZE (IN.)	DIMENSIONS (IN.)		CAP TAPPING SUFFIX -02	WT./EA. LB.	NET SCREEN AREA (IN.)²
			A	B			
FNPT x FNPT							
59-000-01	59LF-000-01	1/8 NPT	2.00	1.25	1/8 NPT	.4	2.3
59-001-01	59LF-001-01	1/4 NPT	2.00	1.25	1/8 NPT	.4	2.3
59-002-01	59LF-002-01	3/8 NPT	2.69	2.00	1/4 NPT	.8	3.2
59-003-01	59LF-003-01	1/2 NPT	2.69	2.00	1/4 NPT	.8	3.2
59-004-01	59LF-004-01	3/4 NPT	4.25	3.25	1/2 NPT	1.9	6.7
59-005-01	59LF-005-01	1 NPT	4.75	4.00	3/4 NPT	2.8	10.8
59-006-01	59LF-006-01	1-1/4 NPT	5.13	4.25	3/4 NPT	3.6	13.5
59-007-01	59LF-007-01	1-1/2 NPT	5.75	5.00	1 NPT	5.4	19.0
59-008-01	59LF-008-01	2 NPT	6.66	6.00	1-1/4 NPT	7.5	27.6
59-009-01	59LF-009-01	2-1/2 NPT	8.24	6.87	1-1/4 NPT	11.3	41.0
59-010-01	59LF-010-01	3 NPT	9	6.87	1-1/2 NPT	15.8	56.0
59-011-01	59LF-011-01	4 NPT	11.92	10.12	1-1/2 NPT	30.7	98
FNPT x MNPT							
59-404-01	59LF-404-01	3/4 F x MNPT	NA	3.25	1/2 NPT	2.0	6.7
59-405-01	59LF-405-01	1 F x MNPT	NA	4.00	3/4 NPT	3.0	10.8

59 SERIES
BRONZE WYE STRAINER - PRESS

LEADFREE OPTIONS

The ApolloPress 59LF Series Strainers with quick press connections are designed to protect potable piping systems from unwanted foreign particles with minimum pressure loss. The valves are built for long reliable service with proven ASTM grade materials including a lead free bronze body and stainless steel strainer.

FEATURES
- Lead Free Bronze Construction
- Fast, Reliable, Economical Press Installation
- Ridgid® XL Press Tool Compatible
- Leak Before Press® Technology
- Self-Aligning SS Screen Design
- Blow-Off Ball Valve Option
- **Proudly Made in USA**

APPROVALS
- NSF/ANSI 372 Lead Free (59LF)
- CRN 0E8959.5C

PERFORMANCE RATING
- Maximum Pressure: 300 psi
- Maximum Temperature: 250°F

OPTIONS

SUFFIX	OPTION
-01	50 Mesh (Std 1/2")
-01	20 Mesh (Std 3/4" - 2")
-02	Tapped Cap
-P2	Tapped Cap with Plug
-06	Tapped Cap with Ball Valve
-E1	20 Mesh (for 1/2")
-B1	60 Mesh
-C1	80 Mesh
-H1	100 Mesh
-59PR	ApolloPress

DIMENSIONS

PART NUMBER	LF PART NUMBER	SIZE (IN.)	LENGTH (IN.)	CV	WT. (LB.)
59-003-01PR	59LF-003-01PR	1/2"	4.75"	5	1.0
59-004-01PR	59LF-004-01PR	3/4"	6.1"	15	2.0
59-005-01PR	59LF-005-01PR	1"	7.25"	28	3.0
59-006-01PR	59LF-006-01PR	1-1/4"	7.62"	55	3.8
59-007-01PR	59LF-007-01PR	1-1/2"	8.25	70	5.7
59-008-01PR	59LF-008-01PR	2"	10.39	99	7.7

For liquids the flow coefficient - Cv - expresses the flow capacity in gallons per minute (GPM) of 60°F water with a pressure drop of 1 psi (lb/in²).

59-300 SERIES
BRONZE WYE STRAINER

LEADFREE OPTIONS

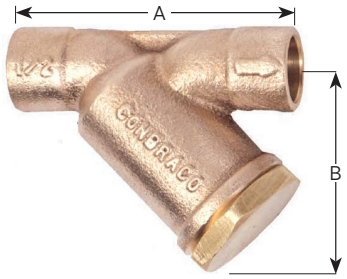

Heavy pattern design with large area screens ensures excellent protection against foreign particles in your fluid system. Corrosion-resistant bronze body and stainless steel screens provide years of service.

FEATURES
- Sizes: 1/2" to 3" Copper Tube Size
- Optional Tapped Caps Available
- 59LF features EZ-Solder™ Bronze
- **Proudly Made in USA**

PERFORMANCE RATING
- Working Pressure:
  CWP: 400 psi
  SWP: 125 psi
- Maximum Temperature: 350° F

APPROVALS
- NSF/ANSI 372 - Lead Free (59LF)

STANDARD SCREENS

SIZE (IN.)	STANDARD SCREEN
1/2	50 Mesh
3/4 to 3	20 Mesh

OPTIONS

SUFFIX	OPTION
-01	Solid cap (standard)
-02	Blow-Off Tap
-P2	Blow-Off with pipe plug

DIMENSIONS

PART NUMBER	LF PART NUMBER	SIZE (IN.)	DIMENSIONS (IN.)		CAP TAPPING SUFFIX -02	WT.	NET SCREEN AREA (IN.²)
			A	B			
59-303-01	59LF-303-01	1/2	2.75	2.0	1/4 NPT	.50	3.19
59-304-01	59LF-304-01	3/4	4.00	3.0	1/2 NPT	1.21	6.7
59-305-01	59LF-305-01	1	4.75	3.5	3/4 NPT	1.89	10.8
59-306-01	59LF-306-01	1-1/4	5.25	4.0	3/4 NPT	2.80	13.5
59-307-01	59LF-307-01	1-1/2	6.00	4.4	1 NPT	4.26	19.0
59-308-01	59LF-308-01	2	7.25	5.1	1-1/4 NPT	6.27	27.6
59-309-01	59LF-309-01	2-1/2	9.50	5.6	1-1/2 NPT	11.00	41.0
59-310-01	59LF-310-01	3	10.50	6.7	1-1/2 NPT	15.0	56.0

59V SERIES
"MINI" STRAINER

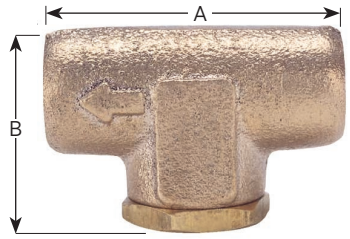

The body of the 59-V is corrosion-resistant solid cast bronze, ASTM B-584. The removable clean-out cap is solid brass, ASTM B-16. Standard screens are made of 304 stainless steel. NOT INTENDED FOR POTABLE WATER

FEATURES
- C_v Factor 1.42 GPM
- **Proudly Made in USA**

PERFORMANCE RATING
- Working Pressure:
  CWP: 400 psi
  SWP: 125 psi
- Maximum Temperature: 350° F

DIMENSIONS

PART NUMBER	SIZE (IN.)	DIMENSIONS (IN.)		WT./100	SCREEN MESH
		A	B		
59V-001-01	1/4 NPT	2.00	1.31	29.7	50
59V-001-H1	1/4 NPT	2.00	1.31	29.7	100

YSS (612) SERIES
STAINLESS STEEL WYE STRAINER

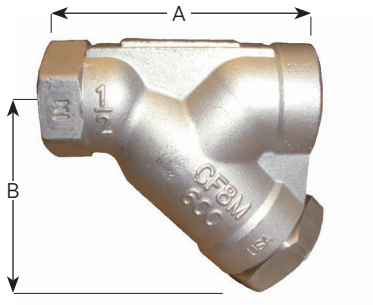

Sturdy and compact with corrosion-resistant stainless steel bodies and stainless steel screens.

FEATURES
- Body is ASTM 316 Stainless Steel Grade CF8M
- 20 Mesh Screen
- Gasket 304 SS/Graphite
- Screen cover is NPT tapped for Customer Supplied Plug or Blow-Off Valve
- **Proudly Made in USA**

PERFORMANCE RATING
- Working Pressure:
  CWP: 1480 psi
  SWP: 600 psi
- Maximum Temperature: 488° F

DIMENSIONS

PART NUMBER	SIZE (IN.)	DIMENSIONS (IN.)		BLOW-OFF NPT	WT. (LB.)	NET SCREEN AREA (IN.^{2})
		A	B			
612-033-A1	1/2	3.38	2.75	3/8	2	5.4
612-034-A1	3/4	4.44	3.63	3/8	3.75	8.7
612-035-A1	1	4.88	3.75	1/2	4	12.7

YCT SERIES
CAST IRON WYE STRAINER - APOLLO INTERNATIONAL™

LEADFREE CERTIFIED

New!

Install these durable strainers upstream in almost any application to protect valves, regulators, solenoids and meters from rust, dirt and pipe scale.

FEATURES
- 20 Mesh Screens Standard to 2"; .045 perf. 2-1/2" to 3", Others Available
- Graphite Gasketed Cover for Easy Screen Cleaning
- Standard Tapped Cap with Plug
- Sizes: 1/4" to 3"
- Connections are NPT to ASME/ANSI B1.20.1
- NSF Approved Epoxy Coating

PERFORMANCE RATING
- Working Pressure:
  CWP: 500 psi
  SWP: 250 psi
- Maximum Temperature: 406° F

APPROVALS
- NSF/ANSI 372 - Lead Free

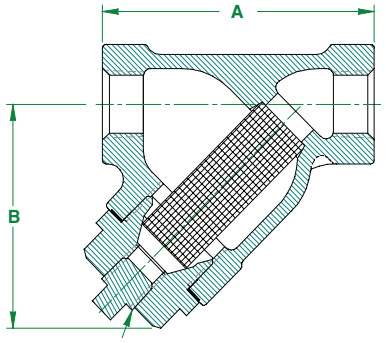

DIMENSIONS

PART NUMBER	SIZE (IN.)	DIMENSIONS (IN.)		BLOW-OFF NPT	WT. (LB.)	NET SCREEN AREA (IN.²)
		A	B			
YCT01M20	1/4	3.19 ± .04	2.17	1/4"	.44	2.8
YCT02M20	3/8	3.19 ± .04	2.24	1/4"	.57	2.8
YCT03M20	1/2	3.19 ± .04	2.76	3/8"	.75	2.8
YCT04M20	3/4	3.74 ± .06	2.83	3/8"	1.10	4.7
YCT05M20	1	4.02 ± .07	3.07	1/2"	1.90	7.0
YCT06M20	1-1/4	5.00 ± .07	3.62	1/2"	3.20	12.1
YCT07M20	1-1/2	5.75 ± .08	4.61	1/2"	4.59	16.4
YCT08M20	2	6.97 ± .08	4.69	1/2"	7.39	23.1
YCT09P045	2-1/2	9.21 ± .10	5.35	3/4"	10.56	55.0
YCT00P045	3	10.00 ± .10	5.91	3/4"	13.29	78.4

YCS & YCSW (612) SERIES
CARBON STEEL WYE STRAINER - APOLLO INTERNATIONAL™

Large volume area screen, reliable construction.

FEATURES
- Body is ASTM A216 Carbon Steel Grade WCB
- 20 Mesh Screen
- Copper Gasket 1/2" to 1-1/2", 304 SS/Graphite on 2"
- Screen Cover is NPT Tapped for Customer Supplied Plug or Blow-Off Valve

PERFORMANCE RATING
- Working Pressure:
  CWP: 1440 psi
  SWP: 600 psi
- Maximum Temperature: 488° F

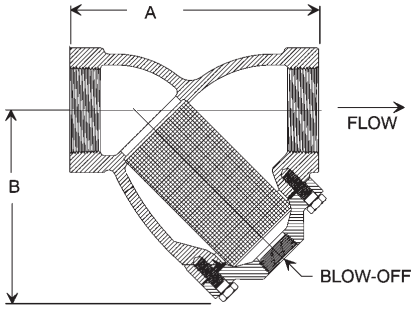

DIMENSIONS

SERIES NUMBER		SIZE (IN.)	DIMENSIONS (IN.)		BLOW-OFF NPT	WT. (LB.)	NET SCREEN AREA (IN.²)
THREADED NPT	SOCKET WELD		A	B			
612023A1	612123A1	1/2	3.38	2.75	3/8	2	5.4
612024A1	612124A1	3/4	4.44	3.63	3/8	3.75	8.7
612025A1	612125A1	1	4.88	3.75	1/2	4	12.7
612027A1	612127A1	1-1/2	6.38	5.13	3/4	8.75	25.3
612028A1	612128A1	2	7.50	6.00	1	12	39.2

YCF SERIES
CLASS 125 CAST IRON WYE STRAINER

LEADFREE OPTIONS

LEAD FREE

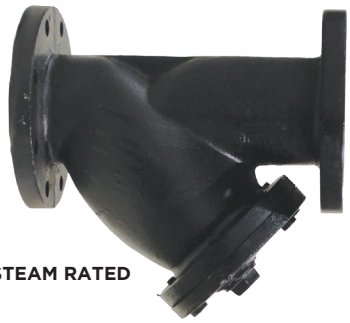

STEAM RATED

The Apollo International™ YCF Strainers are designed to protect piping systems and process equipment from unwanted foreign particles with minimum pressure loss.

FEATURES
- Iron Strainer with Flat Face Flanges Conforms to ASME/ANSI 16.1 Class 125
- One Piece Cast Body Meets ASME Standard
- Epoxy Coated Models conform to FDA CFR21, Section 175.300 and NSF/ANSI 372 - Lead Free
- Equipped with Bolted Cover Employing Flat Gasket Seal
- Upper and Lower Machined Seats for Screen for Self-Aligning Screen Design
- 304 SS Perforated Screens are Standard (P045 STD 2"-3", P125 STD 4"-12")
- Tapped Blow Off Connection with Plug
- 100% Factory Pressure Tested

PERFORMANCE RATING (LEAD FREE)
- Working Pressure:
  CWP: 200 psi @ 180° F Max.

***not for steam service.**

PERFORMANCE RATING (STEAM RATED)
- Working Pressure:
  CWP 200 PSIG
  SWP 125 PSIG @ 353°F

STANDARD MATERIALS LIST

BODY	Cast Iron, ASTM A126-B
CAP/COVER	Cast Iron, ASTM A126-B
PLUG	Carbon Steel, ASTM A307
BOLT/STUD/NUT	Carbon Steel, ASTM A307
SCREEN	304 Stainless Steel
GASKET	Graphite
COATING (LEAD FREE ONLY)	Epoxy, FDA Approved

DIMENSIONS

PART NUMBER STEAM RATED	PART NUMBER LEAD FREE	SIZE/DN		A		B		C		D		E		F		DRAIN PLUG		WEIGHT	
		IN	MM	IN	MM	IN	MM	IN	MM	IN	MM	IN	MM	IN	MM	IN	MM	LB.	KG.
YCF02P045	YCF02P045E	2"	50	8.86	255	0.63	16	5.98	152	4.75	121	0.75	19	6.30	160	1/2"	4	23	11
YCF25P045	YCF25P045E	2-1/2"	65	10.75	273	0.69	18	7.01	178	5.50	140	0.75	19	7.64	194	1"	4	34	15
YCF03P045	YCF03P045E	3"	80	11.50	292	0.75	19	7.48	190	6.00	153	0.75	19	8.86	225	1"	4	47	21
YCF04P125	YCF04P125E	4"	100	13.86	352	0.94	24	8.98	228	7.50	191	0.75	19	10.63	270	1-1/4"	8	72	33
-	YCF05P125E	5"	125	16.38	416	0.94	24	10.00	254	8.50	216	0.88	22	12.60	320	1-1/4"	8	111	50
YCF06P125	YCF06P125E	6"	150	18.50	470	1.00	25	10.98	279	9.50	242	0.88	22	14.69	373	1-1/2"	8	150	68
YCF08P125	YCF08P125E	8"	200	21.38	543	1.12	29	13.46	342	11.75	299	0.88	22	17.72	450	1-1/2"	8	235	107
-	YCF10P125E	10"	250	25.98	660	1.18	30	15.98	406	14.25	362	1.00	25	20.67	525	2"	12	369	168
-	YCF12P125E	12"	300	30.00	762	1.25	32	19.02	483	17.00	432	1.00	25	23.94	608	2"	12	552	250

PART NUMBER MATRIX

YCF	XX	XXX[X]	X
	CONNECTION SIZE	SCREEN TYPE	OPTION
YCF (FLAT FACE)	02 - FLANGED 2"	M20 - 20 MESH	E - EPOXY COATING, FDA APPROVED
	25 - FLANGED 2.5"	M40 - 40 MESH	LEAD FREE ONLY, NOT FOR STEAM
	03 - FLANGED 3"	M80 - 80 MESH	
	04 - FLANGED 4"	M100 - 100 MESH	
	05 - FLANGED 5"	P045 - .045" PERF	
	06 - FLANGED 6"	P125 - .125" PERF	
	08 - FLANGED 8"		
	10 - FLANGED 10" (LF ONLY)		
	12 - FLANGED 12" (LF ONLY)		

**All mesh screens include liner:*
.045" Perf on 3" and smaller
.125" Perf on 4" and larger
***All screens not available for all sizes.*
****Limited screen options available for non-lead free steam rated version.*

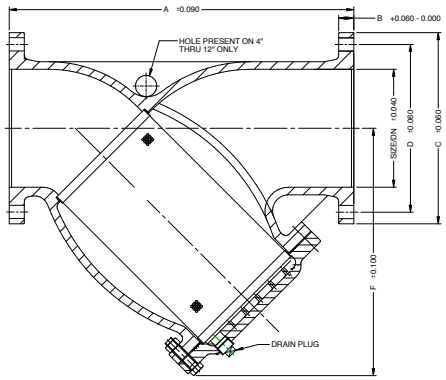

ENGINEERING DATA
PRESSURE DROP (LIQUIDS)

The following optional features are available for most Apollo Y-Strainers. Please consult factory if required feature not shown.

FEATURE	DESCRIPTION OF AVAILABILITY
Screen Openings	Range 150 micron to 1/4" perf.
Screen Materials	Stainless Steel (304)
Screen Construction	Perforated Plate/Mesh Wir.
Gaskets	Graphite
Standard coating	FDA Epoxy Coating

*Strainer size may effect the ability to apply certain coatings and linings.

Y-STRAINER PRESSURE DROP - (SIZES 2" - 12") **FIGURE 1**

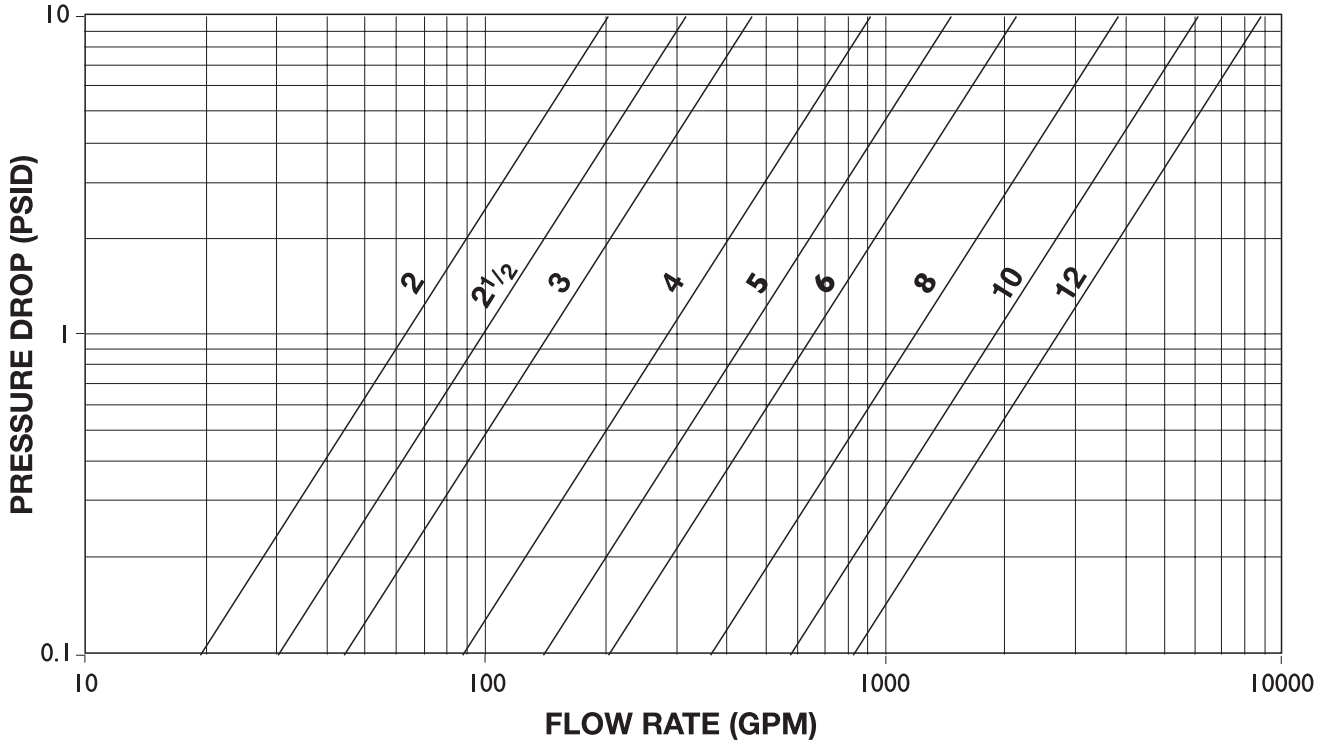

Pressure drop curves are based on water flow with standard screens.
See next page for correction factors to be used with other fluids and/or screen openings.

ENGINEERING DATA
SCREEN OPENINGS

PURPOSE
If the strainer is being used for protection rather than direct filtration, Apollo's standard screens will suffice in most applications.

SERVICE
With services that require extremely sturdy screens, such as high pressure/ temperature applications or services with high viscosities, Apollo recommends that perforated screens without mesh liners be used. If mesh is required to obtain a certain level of filtration, then Apollo recommends a trapped perf./ mesh/perf. combination.

FILTRATION LEVEL
When choosing a perf. or a mesh/perf. combination attention should be given to ensure overstraining does not occur. As a general rule the specified level of filtration should be no smaller than half the size of the particle to be removed. If too fine a filtration is specified the pressure drop through the strainer will increase very rapidly, possibly causing damage to the basket.

SCREEN TYPES & DIMENSIONS

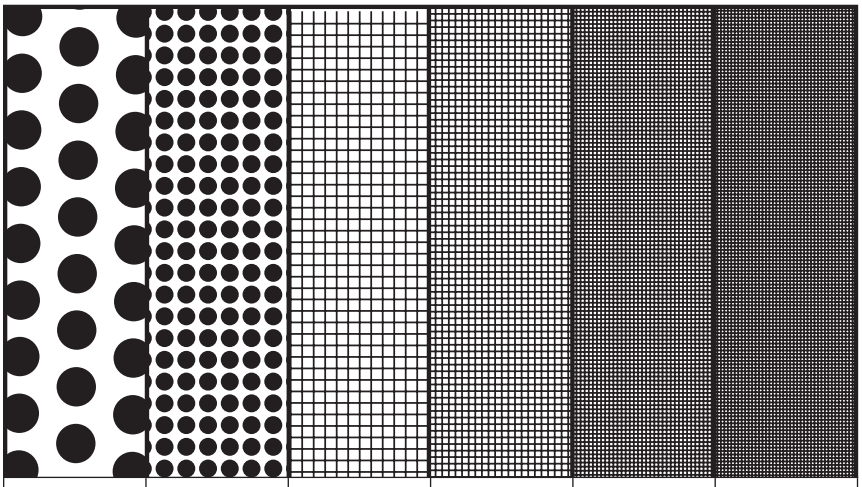

1/8" Dia. - 40% O.A. (P125)	1/16" Dia. - 37% O.A. (P045)	20 Mesh - 49% O.A. 0.035" Openings	40 Mesh - 41% O.A. 0.016" Openings	80 Mesh - 36% O.A. 0.008" Openings	100 Mesh - 30% O.A. 0.006" Openings

STANDARD SCREENS

SIZE RANGE	OPENING
2" - 3"	0.045 in.
50mm - 80mm	1.2mm
4" and larger	0.125 in.
100mm and larger	3.2mm

All screens not available for all sizes
All mesh screens include liner:
.045 Perf 3" and smaller
.125 Perf 4" and larger

ENGINEERING DATA
EFFECTIVE SCREEN AREA

PIPE SIZE (IN.)	STD. OPENING (IN.)	NOMINAL AREA OF PIPE FIT-TING (SQ. IN.)	GROSS SCREEN AREA (SQ. IN.)	FREE AREA (SQ. IN.)	RATIO FREE AREA TO PIPE AREA
2	0.045	3.14	30.07	10.82	3.45
2-1/2	0.045	4.91	44.33	15.96	3.25
3	0.045	7.07	56.45	20.32	2.88
4	0.125	12.57	98.91	39.56	3.15
5	0.125	19.63	147.11	58.85	3.00
6	0.125	28.27	179.19	71.68	2.54
8	0.125	50.27	334.38	133.75	2.66
10	0.125	78.54	505.21	202.08	2.57
12	0.125	113.10	665.77	266.31	2.35

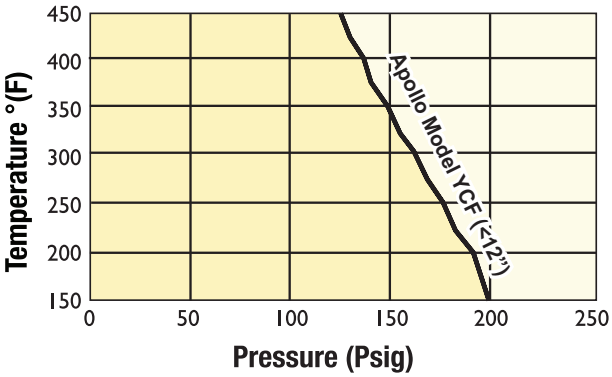

ENGINEERING DATA
SCREEN CORRECTION FACTOR CHART

CHART 1

SIZE RANGE	SCREEN OPENINGS							
	PERFORATED PLATE % SCREEN MATERIAL OPEN AREA					MESH LINED STANDARD SCREENS % SCREEN MATERIAL OPEN AREA		
	60%	50%	40%	30%	20%	50%	40%	30%
2" - 12"	0.65	0.8	1	1.4	2.15	1.05	1.05	1.2

** Multiply values obtained from figure 1 thru 4 by the appropriate values shown below*

See perforated plate open areas chart
Standard screens for sizes 2" and larger is approximately a 40% open area screen media.
All mesh screens include liner:
.045 Perf 3" and smaller
.125 Perf 4" and larger

EXAMPLE:
Strainer Size: 2"
Filtration: 100 mesh lined
Flow Rate: 65 GPM
Service: Water

Using Figure 1 the pressure drop is determined to be 1.0 psid with Apollo's standard screen.
See perforated plate open areas chart to find that the % open area of 100 mesh is 30%.
Using Chart 1 we read the correction factor to be 1.2 for 100 mesh lined .045" perf
Total pressure drop equals 1.0 x 1.2 = 1.2 psid clean.

VISCOSITY AND DENSITY CORRECTION FACTOR CHART

CHART 2

SIZE RANGE	COMPONENT FACTOR (CF)
2" - 12"	0.35

CHART 3

VISCOSITY CP	BODY LOSS FACTOR (BF)	SCREEN LOSS FACTOR			
		PERF ALONE (PF)	20 MESH LINED (MF)	40 MESH LINED (MF)	60 TO 100 MESH LINED (MF)
10	1	1.15	1.3	1.4	1.5
25	1.2	1.25	2	2.2	2.5
100	1.6	1.4	3	4	6.5
200	2.2	1.5	4.5	7	11.5
500	4.4	1.6	10	15	25
1000	8	1.7	15	30	50
2000	15.2	1.9	30	60	100

HOW TO USE
1. Using Figure 1, determine the pressure drop (P1) through the strainer with water flow and standard screens.
2. If non-standard screens (i.e. 40 mesh, etc.) are being used apply factors in
3. Use Chart 1 to determine corrected pressure drop (P2).
4. Multiply P1 or P2 (is used) by the specific gravity of the fluid actually flowing through the strainer to get P3.
5. Using Chart 2 multiply P3 by the appropriate Component Factor (CF) to get P4.
6. Let P5 = P3 - P4.
7. Multiply P4 by the appropriate Body Loss Factor (BF) in Chart 3 to get P6.
8. Multiply P5 by the appropriate Screen Loss factor (PF or MF) in Chart 3 to get P7.
9. Total pressure drop P8 = P6 + P7.

EXAMPLE:
Strainer Size: 2"
Filtration: 100 mesh lined
Specific Gravity: 1
Viscosity: 25 cP

As shown in the above example, the corrected pressure drop (P2) = 1.2 psid
Since S.G. = 1, P3 = P2 = 1.2 psid
Using Chart 2, P4 = 0.35 x P3 = 0.42 psid
P5 = 1.2 - 0.4 = 0.8 psid
Using Chart 3, P6 = 0.4 x 1.2 = 0.48 psid
Again using Chart 3 P7 = 0.8 x 2.5 = 2.0 psid
Total pressure drop P8 = 0.48 + 2.0 = 2.48 psid

ENGINEERING DATA
PRESSURE DROP (SATURATED STEAM)

SIZES 2" - 12"

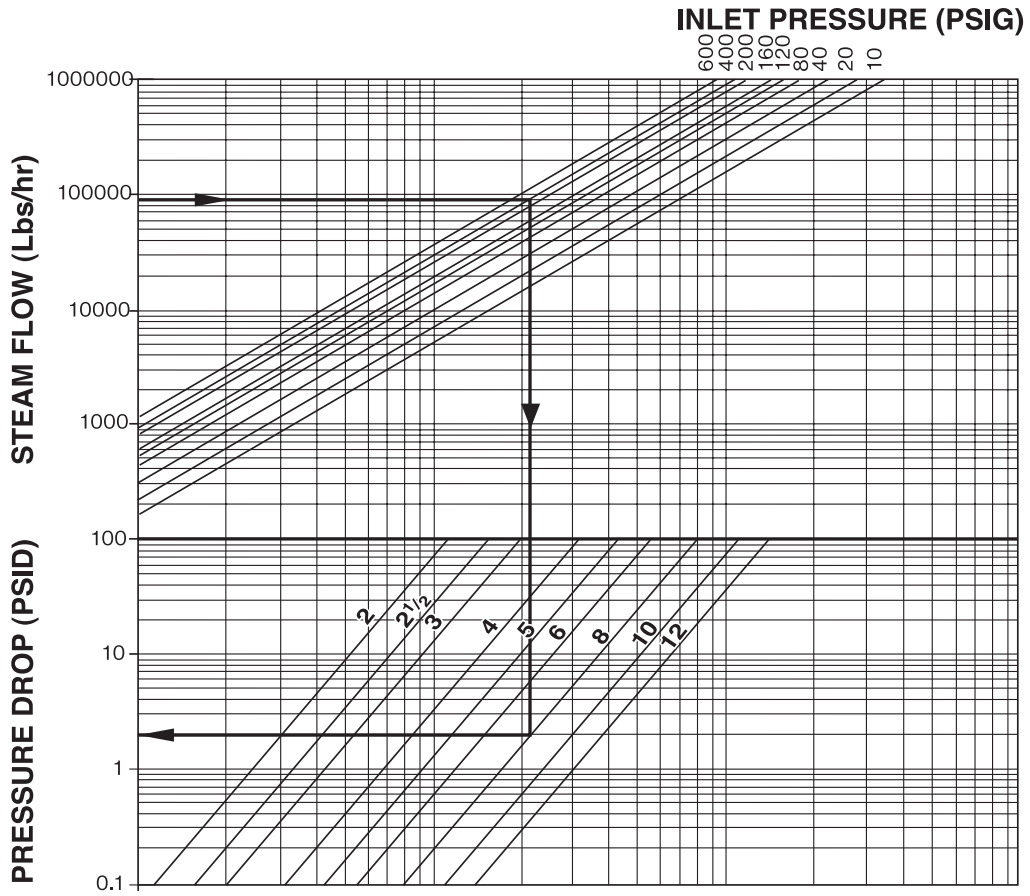

Pressure drop curve is based on saturated steam flow with standard screens. See page 5 for correction factors to be used with other screen openings.
Chart can be used for air and gas by using the following formula:

$$Qs = 0.138\, Qg \sqrt{(460+t)\, s.g.} \quad \left\{ \frac{DP}{P_2} < 1.0 \right\}$$

FOR NON-CRITICAL FLOW

WHERE
Qs - Equivalent Steam Flow, Lbs./Hr.
Qg - Air or gas flow, SCFM.
t - Temperature, °F.
s.g. - Specific gravity (s.g. - 1 for air.)
DP - Pressure Drop, psid
P2 - Outlet Pressure

EXAMPLE:
Service: Saturated Steam
Pressure: 400 psig
Steam Flow: 90,000 Lb./Hr.
Size: 8"

Locate steam flow.
Follow horizontal line to required pressure.
Follow vertical line downwards to required strainer size.
Follow horizontal line to read pressure drop
Pressure drop equals 2.0 psid.

CHECKLIST AND SUGGESTED SPECIFICATIONS

STRAINER CHECKLIST

When selecting a strainer, please take the factors listed below into account. This will assist us when recommending a strainer to suit your specific requirements.

Fluid to be Strained: _____
Flow Rate: _____
Density of Fluid: _____
Viscosity of Fluid: _____
Fluid Working Pressure: _____
Maximum Pressure: _____
Fluid Working Temp.: _____
Maximum Temp.: _____
Preferred Strainer Material: _____
Present Pipeline Size & Material: _____
Nature of Solids to be Strained Out: _____
Size of Solids to be Strained Out: _____
Size of Mesh or Perf. Req.: _____
Clearance Limitation: Above:_____Below:_____
Left Side Facing Inlet: _____
Right Side Facing Inlet: _____
Max Pressure Drop with Clean Screen: _____
Expected Cleaning Frequency: _____
Any Other Relevant Information: _____

SUGGESTED SPECIFICATIONS

The strainer shall be a Y-Type and have _____ (size) inlet/outlet connections. The end connections shall be flanged and the body shall be complete with a bolted cover assembly. The strainer shall be suitable for _____ PSIG operating pressure at _____°F operating temperature. The body shall be constructed of _____(body material) while the screen shall be constructed of _____ (screen material). A mesh lining of _____ (size of mesh) is required, allowing a maximum pressure drop of _____ psig. The strainer shall be equipped with a _____ (gasket material) gasket and the strainer screen shall be able to withstand _____ psig differential pressure without any deformation.

Strainers shall be Apollo Model #_____ or approved equivalent.

Name _____
Company _____
Address _____
City _____
State _____ Zip Code_____
Telephone (_____)_____
Fax (_____)_____

INSTALLATION & MAINTENANCE INSTRUCTIONS

STRAINER INSTALLATION INSTRUCTIONS

1. Ensure all machined surfaces are free of defects and that the inside of the strainer is free of foreign objects.
2. WYE Strainers can be installed horizontally or vertically as long as the filter leg is pointing down. This guarantees that strained (filtered) materials do not interfere with the main flow.
3. For flanged end strainers, the flange bolting should be tightened gradually in a back and forth clockwise motion.
4. Once installed, increase line pressure gradually and check for leakage around joints.
5. If the strainer is supplied with a start-up screen, monitor pressure drop carefully.

NOTE: Flat face mating flanges and full face gaskets must be used with YCF series flanged strainers to avoid damage to the cast iron body.

IMPORTANT
Ultimate responsibility for strainer and material selection rests with the customer, as only the customer knows the particular use to which the strainer will be put and the exact operating parameters to which it will be subjected.

STRAINER REMOVAL INSTRUCTIONS

1. Drain piping.
2. Vent line to relieve pressure.
3. Secure necessary lifting equipment to strainer assembly.
4. Loosen flange bolts (Pipe flanges only).
5. Remove inlet/outlet flange bolts and carefully remove strainer.

CAUTION SHOULD BE TAKEN DUE TO POSSIBLE EMISSION OF PROCESS MATERIAL FROM PIPING. ALWAYS ENSURE NO LINE PRESSURE EXISTS WHEN OPENING COVER.

MAINTENANCE INSTRUCTIONS

For maximum efficiency, determine the length of time it takes for the pressure drop to double that in the clean condition. Once the pressure drop reaches an unacceptable value, shut down line and follow the "Screen Replacement Instructions". A pressure gauge installed before and after the strainer in-line will indicate pressure loss due to clogging and may be used to determine when cleaning is required.

SCREEN REPLACEMENT

It is recommend that the system and strainer be depressurized before attempting any repair work. After removing all pressure, the system should be drained, any connections to the blow-off plug should be removed, and the following procedure should be used to replace the screen.

1. Attach cable or chain to strainer cover (1) and apply sufficient tension to prevent cover from dropping.
2. Remove bolts from cover.
3. Remove cover, clean and inspect gasket surface of cover.
4. Remove and discard old gasket.
5. Remove and clean or discard old screen.
6. Clean and inspect gasket surface of body. If gasket surface of cover or body is damaged, the damaged component must be replaced.
7. Push clean screen into position in body.
8. Position new gasket in place on body.
9. Line up screen and put cover in place on body.
10. Be sure gasket, bolt holes, and screen are properly aligned.
11. Put in bolts and nuts as required.
12. Tighten bolts, using "star" pattern to prevent damaging parts. Alternate tightening 180° apart. Tighten bolts sufficiently to stop leakage under test and service conditions.